SHOEMAKER
DAMPER LOUVER SUBMITTAL FORM

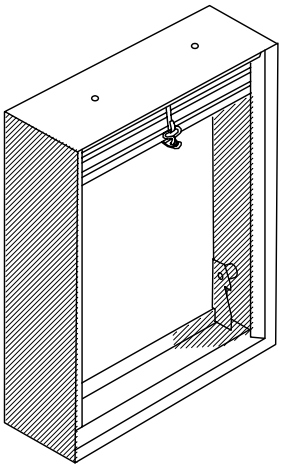

2661

CLASSIFIED UL 2-15250

2661 Series
3 Hour Rated Standard frame Curtain–type 3 Hour Fire Door

Standard:

- 2661– Square or rectangular for vertical mount only . Maximum size: 60 x 60
- 3 hour vertical fire door
- UL & California State Fire Marshall approved
- 4–1/4" Standard frame style
- Interlocking steel roll–formed blade (3) with roll–formed frames (1)
- Blade Lock (5)
- Damper manufactured from corrosion tested galvanized mild steel (G–90)
- Self locking corner (4)
- 165°F replaceable fusible link (2)
- Spring Actuated (6)
- Operation vertical mount only

Optional:

☐ 304 stainless steel
☐ Sleeve variations

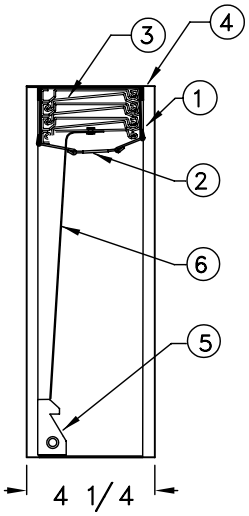

2661

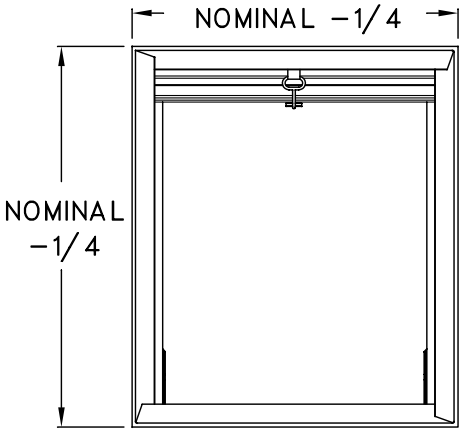

2661

Print Form

PROJECT	SUBMITTAL REVIEW
LOCATION	
ENGINEER	
ARCHITECT	
CONTRACTOR	

SHOEMAKER
DAMPER LOUVER SUBMITTAL FORM

2663

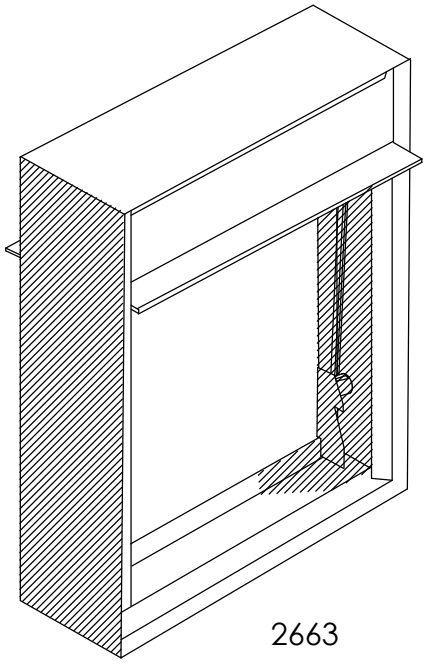

2663

CLASSIFIED UL 2-15250

2663 Series
Standard Frame Curtain-Type
3 Hour Fire Door

Standard:

- 2663 - Square or rectangular spring actuated (6) for Vertical mount out-of-airstream. Maximum size 60w x 52h
- 3 Hour rated vertical fire damper UL & California State Fire Marshall approved
- 4 1/4" standard frame style
- Interlocking steel roll-formed blade (3) with roll-formed frames (1)
- Blade Lock (5)
- Damper manufactured from corrosion tested galvanized mild steel (G-90)
- Self locking corner (4)
- 165°F replaceable fusible link (2)
- Operation vertical mount only

Optional:

☐ 304 stainless steel
☐ Sleeve variations

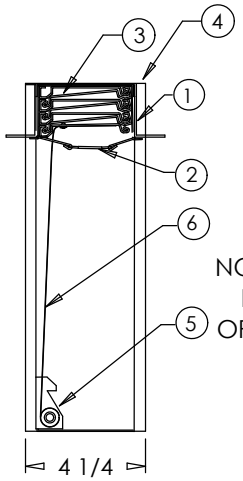

2663

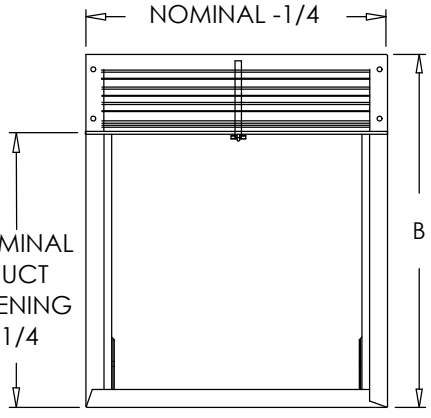

2663

Frame Height 'B'	
Duct Height	Height (B)
4-7"	+3/4"
8-16"	+1 3/4"
17-26"	+2 3/4"
27-35"	+3 3/4"
36-44"	+4 3/4"
45-52"	+5 3/4"

'B' Dimension chart- Example:
Height 'B' for 20" duct = 22 3/4"

Print Form

PROJECT	SUBMITTAL REVIEW
LOCATION	
ENGINEER	
ARCHITECT	
CONTRACTOR	

SHOEMAKER DAMPER LOUVER SUBMITTAL FORM

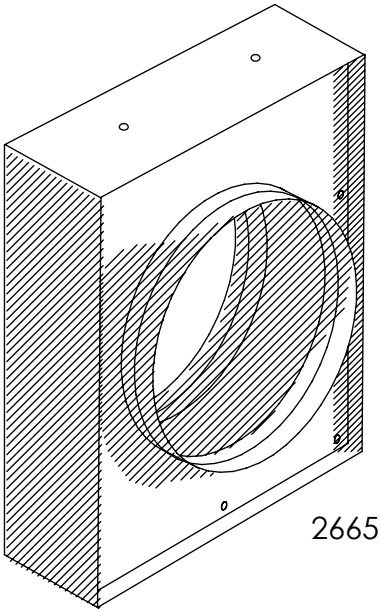

2665

CLASSIFIED UL 2-15250

2665 Series
Standard Frame Curtain-Type
3 Hour Fire Door

Standard:

- Round spring actuated (6) for vertical mount only. Available 4" thru 52"
- 3 hour vertical fire door
- UL & California State Fire Marshall approved
- 4 1/4" Standard frame style
- Interlocking steel roll-formed blade (3) with roll-formed frames (1)
- Blade Lock (7)
- Damper manufactured from corrosion tested galvanized mild steel (G-90)
- Self locking corner (4)
- 165°F replaceable fusible link (2)
- Operation Vertical Mount Only

Optional:

☐ 304 stainless steel
☐ Sleeve variations

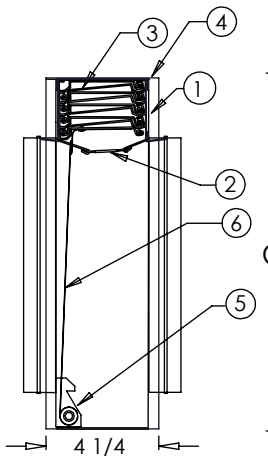

2665

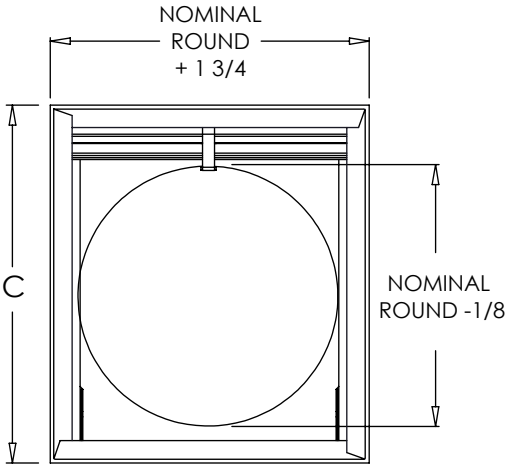

2665

Frame Height 'C'	
Duct Size	Height (C)
4-7"	+1 3/4"
9-16"	+2 3/4"
17-26"	+3 3/4"
27-35"	+4 3/4"
36-44"	+5 3/4"
45-52"	+6 3/4"

'C' Dimension chart- Example:
Height 'C' for 20" duct = 23 3/4"

Print Form

PROJECT	SUBMITTAL REVIEW
LOCATION	
ENGINEER	
ARCHITECT	
CONTRACTOR	