Home Care Technical Specification

Adjustable Shower Chair DN8060

Stock Numbers:

- **DN8060 – Adjustable Shower Chair**
  Adjustable seat height from 17" to 21"

Dimensions:

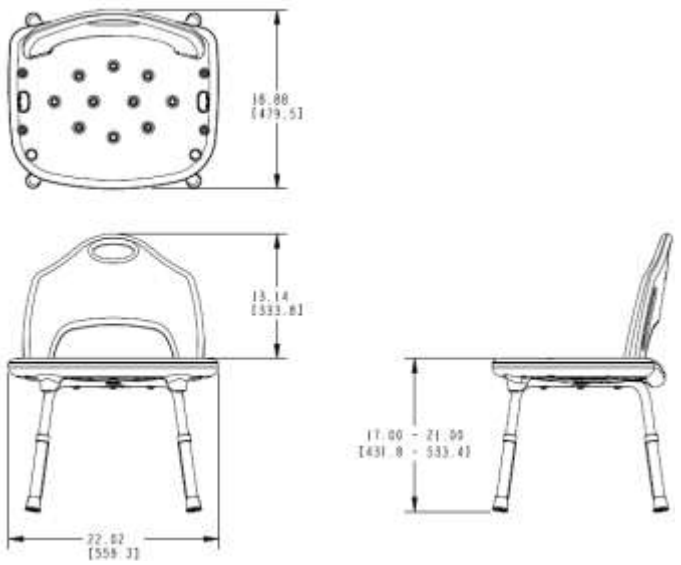

Materials:

Adjustable Shower Chair is made from high impact polypropylene. Legs are polished anodized aluminum. Feet are gray rubber.

ASSEMBLY TESTED TO CONFIRM ADA COMPLIANCE

WARNING
TO PREVENT SERIOUS OR FATAL INJURY: Insure product is assembled, adjusted and used properly. FOR USE ONLY BY PERSONS WEIGHTING LESS THAN 300 POUNDS. Failure to follow correct assembly and/or adjustment procedures can make the seat unstable. ALL FOUR LEGS MUST BE LOCKED IN PLACE AT THE SAME HEIGHT. DO NOT jump on, stand on or tilt. Contact CSI immediately at 1-800-882-0116 if any components are missing or damaged. Do not modify or substitute any components. FOR QUESTIONS OR ASSISTANCE WITH ASSEMBLY CONTACT CSI AT 1-800-882-0116. Consult healthcare professional for advice and instructions specific to user's needs before use.

Installation Instructions:

1. Position legs. Place leg "1" into grove "1" of the plastic seat panel so that the number "1" marks are next to each other. Then place leg "2" into groove "2", over leg "1" so that the number "2" marks are next to each other.
2. Attach legs. Insert a 1 ½" screw through a washer and the center hole of the legs and seat. Tighten several turns. Insert remaining four screws through washers into the four leg holes. Tighten all five screws fully. Test seat. Retighten as needed.
3. Adjust leg height. Push in button on leg, slide leg to desired height and allow button to pop out and lock leg in place. Repeat for each leg, making sure all four are adjusted to the same height.

Cleaning Instructions:

Clean only with a soft, damp cloth. Do not use commercial or abrasive cleaners.

Stock Number:_____Adjustable Shower Chair By Creative Specialties

Creative Specialties® International
a Division of MOEN
Buy it for looks. Buy it for life.®

25300 AL MOEN DRIVE • NORTH OLMSTED, OH 44070
CORPORATE HEADQUARTERS: (800) 321-8809 • FAX: (800) 848-6636
INTERNATIONAL: (440) 962-2000 • FAX: (440) 962-2726
CUSTOMER SERVICE (USA): 800-882-0116 • FAX: (888) 379-2720
WWW.MOEN.COM

©Copyright Creative Specialties International Literature #BA1699

07/17/2015 BA1699 S0000103914
Released 00