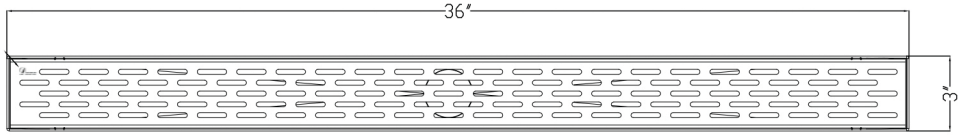

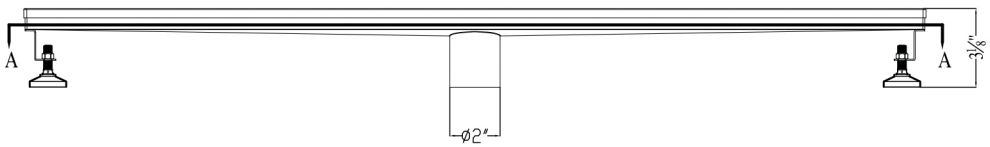

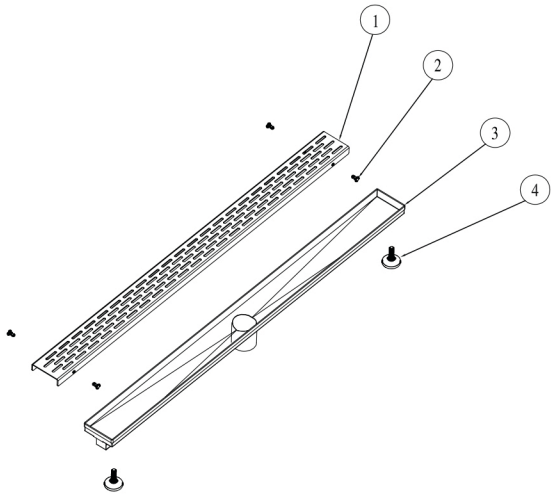

NO	DESCRIPTION	QTY	MATERIAL	SIZE
1	Linear drain cover	1	SUS304	35¾″X2¾″X¾″(14G)
2	plastic connectors	4	PP	ø3/8 X 3/4
3	Linear drain stand	1	SUS304	36"X3"X3⅛"(18G)
4	mounting brackets	2	composite material	ø1 3/8 X 1 3/4

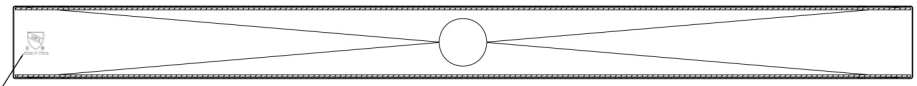

SECTION A-A